Mahindra Bolero Maxi Truck Plus

BMT PLUS CNG PS BSVI

Manufacturing	: 11/2020
No. Of Owners	: 1
Duplicate Keys	: N/A
KM Driven	: 1,09,008
Fuel Type	: CNG
Reg State	: Delhi
Reg City	: Delhi
Insurance Expiry	: 05-03-2026
RC Availability	: Yes
Permits	: National Permit
Permits Date Validity	: 28-03-2027

VEHICLE DETAILS

Registration Number	**DL 1L AE 4084**	RTO	**RAJPUR ROAD**
City	**Delhi**	RTO NOC Issued	**N/A**
Inspection At	**On-Site**	Under Hypothecation	**No**
Branch	**Delhi**	CNG/LPG Instalment	**Yes**
To be scrapped	**No**	Chassis Number Embossing	**Yes**
Manufacturing	**11/2020**	PUC Validity	**17-02-2026**
Registration	**12/2020**	MV Tax (Upto)	**31-12-2025**
Lifespan Remaining	**10 Months, 9 Years**	Fitness (Upto)	**21-04-2026**
RC Mismatch if any	**No**		

SUMMARY

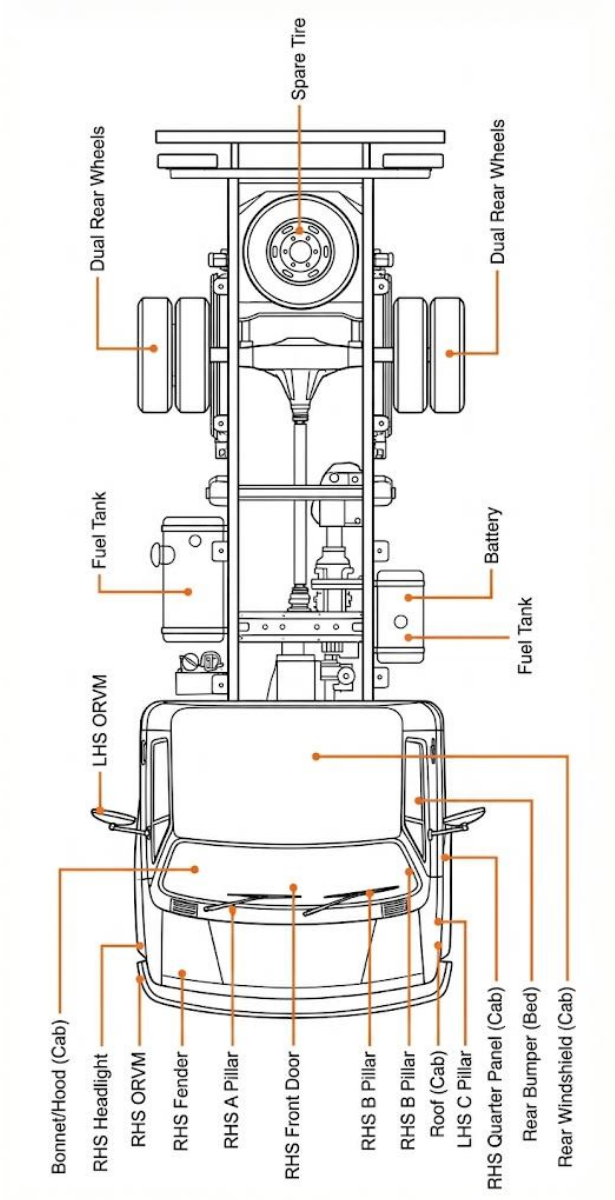

Exterior + Tyres

Part	Sub-Part	Status	Remarks / Condition
Bumper	Front / Rear	!	Front Right Bumper Minor Damage
Cabin Panels	LHS / RHS	✓	
Bonnet / Hood	—	✓	

Roof (Cab)	—	✓	
Fender	LHS / RHS	✓	
Doors	LHS / RHS	✓	
Windshield	Front / Rear	✓	
Pillars	A / B / C	✓	
Load Body Floor	—	✓	
Side Panels	—	!	Slight Rusting in Payload
Tailgate	—	✓	
Chassis Visible Area	—	✓	
Tyres	1	✓	80-90%
Tyres	2	✓	60-70%
Tyres	3	✓	70-80%
Tyres	4	✓	80-90%
Spare Tyre	—	N/A	
Wheels / Rims	—	✓	

Electricals + Interior

Part	**Sub-Part**	**Status**	**Remarks / Condition**
Battery	—	✓	

Wiring Harness	—	✓	
Headlights	LHS / RHS	!	RHS Slightly Fogged
Tail Lamps	LHS / RHS	✓	
Indicators	—	✓	
Horn	—	✓	
Instrument Cluster	—	✓	
Warning Lights	—	✓	
Dashboard	—	✓	
Seats	Driver / Co-driver	✓	
Seat Belts	—	✓	
Cabin Fan / Blower	—	✓	
Wipers	—	✓	

Engine + Transmission

Part	Sub-Part	Status	Remarks / Condition
Cold Start	—	✓	
Idling	—	✓	
Blow-by	Dipstick Test	✓	
Exhaust Smoke	—	✓	

Engine Oil	—	✓	
Coolant	—	✓	
Oil Leakage	—	✓	
Fuel Injection	—	✓	
Turbocharger	—	✓	
Clutch	—	✓	
Gear Shifting	—	✓	
Gearbox Noise	—	✓	
Propeller Shaft	—	✓	
Differential	—	✓	

Steering / Suspension + Brakes

Part	Sub-Part	Status	Remarks / Condition
Steering Free Play	—	✓	
Steering Box	—	✓	
Kingpin / Ball Joint	—	✓	
Leaf Springs	—	✓	
U-Bolts & Clamps	—	✓	
Shock Absorbers	—	✓	

Front Axle	—	✓	
Brake Pedal Feel	—	✓	
Brake Pull	—	✓	
Brake Lines	—	✓	
Parking Brake	—	✓	

Vehicle Photo Documentation Sheet

PROFILE	PHOTOGRAPH
1	
2	

3	POWER STEERING OLERO MAXITRUCK PLUS CNG
4	891704141

5	DL-1L AE4084
6	बेटी बचाओ बेटी पढ़ाओ ड्राईवर की लापरवाही पर सूचित Ph.:- 9891704141 Speed 40 K/H DL-1L AE4084 PUBLIC CARRIER BLOW HORN KEEP DISTANCE DL 1LAE4084

7	
8	

9	
10	

11	
12	MAHINDRA & MAHINDRA LTD. AAPA 0112 MAX 2750 kg N.A. kg 1 970 kg 2 1780 kg MODEL CMT PLUS CNG PS BSVI ENGINE NO.

13	
TYRE 1	

TYRE 2	
TYRE 3	

TYRE 4	